u2t photonics

Two stage OTDM Multiplexer

Product Code: OMUX-2-40 / 160 / 640

Product Description

The optical time domain multiplexer (OTDM) is designed for STM-64 based ultra high-speed transmission and test systems ranging from 10 Gbit/s up to 640 Gbit/s, depending on the multiplexer version. The multiplexer consists of two stages, where each stage can be switched on or off independently. Therefore, for e.g. a 10 Gbit/s input signal, the output delivers a 10, 20 or 40 Gbit/s signal. In particular, if a 2^7-1 PRBS pattern is applied as input signal, the multiplexer ensures also a true 2^7-1 PRBS pattern at the output. The other multiplexer versions are designed for a 40 or Gbit/s input signals and can deliver a respective output signal of either 40, 80, 160, 320 or even 640 Gbit/s. The suppression of the spurious sub-harmonics is better than 40 dB. Either single or dual output polarization are possible. All devices reveal an excellent stability.

The OMUX can be ordered with two separate options:

Option A, Polarizer: If required the OMUX can be delivered with an integrated polarizer at one output. This enables easy adjustment of the polarization state at the output.

Option B, Delayline adjustment: To match the multiplexer exactly to the applied input data rate the time delay in each stage must be adjusted. By using the configuration option B the delay lines are motor driven to change the delay length L very precisely. Time delay range is about 100 ps, setting accuracy is better than 0.1 ps. The control of the delay line is managed by pressing push-buttons at the hand held, which shows position of each delay line. One position for each stage can be stored.

Features

- Fiber based delay line multiplexer
- Two independent stages
- True PRBS output pattern
- Output bit-rate up to 640 Gbit/s
- Low insertion loss
- Excellent long-term stability
- Allows polarization multiplexing

Applications

- Ultra high bit rate OTDM communication systems
- High-speed time domain lightwave characterization

Absolute Maximum Ratings

Parameter	Symbol	Condition	Min.	Typ.	Max.	Unit
Storage temperature	T_{stg}	non condensing	-20		+60	°C

Operation Conditions

Parameter	Symbol	OMUX 2 - 40	OMUX 2 - 160	OMUX 2 - 640	Unit
Operating ambient temperature range	T_{amb}	10 ... 40		20 ... 40	°C
Operating wavelength range	λ	1500 ... 1600 or 1260 ... 1360 1)			nm
Input data rate		N * 9.9533; N = 1,2	N * 39.813; N = 1,2	N * 159.25; N = 1,2	dBm
Output data rate		N * 9.9533; N = 1,2,4	N * 39.813; N =1,2,4	N * 159.25; N = 1,2,4	dBm

Optical and Electrical Specifications

Parameter	Symbol	OMUX 2 - 40	OMUX 2 - 160	OMUX 2 - 640	Unit
Excess loss	T_{amb}	< 5		< 8	dB
Subharmonics supression		< 40		t.b.d.	dB_{el}
Output polarization		single or dual			
Input data format	λ	2^7-1 ... 2^{31}-1 PRBS			
Output data format		2^7-1 PRBS (for 2^7-1 input)			
Weight		4.85			kg

Notes: 1) Please define by order code (see Ordering information on page 3)

Block Diagram

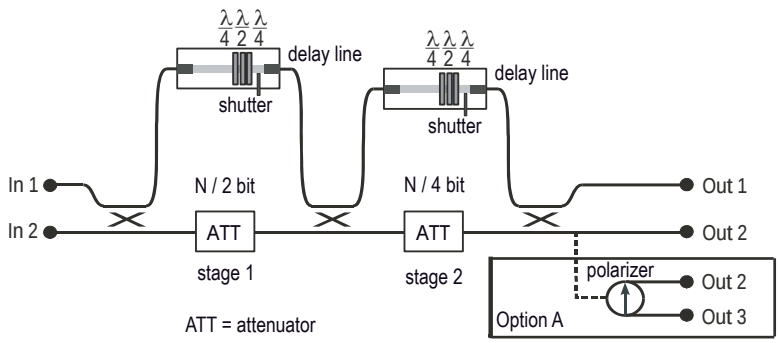

Mechanical Dimensions

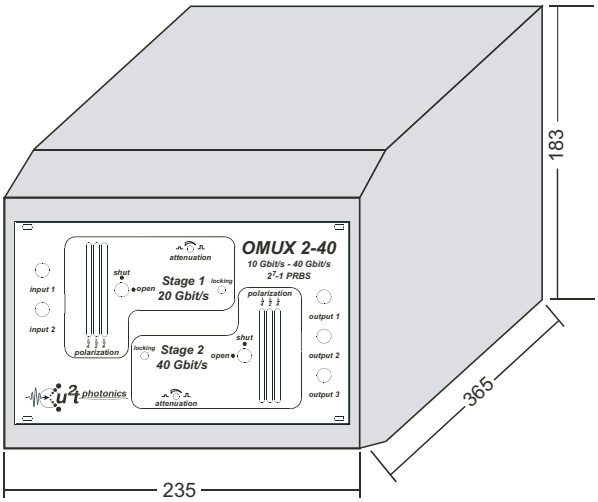

All dimensions in mm.

Ordering Information

Please use the following table to select your required configuration of the photoreceiver.

OMUX 2 - xxx - wwww - zz - oo

specifies options
A = polarizer option B = motor driven delay lines
AB = polarizer option and motor driven delay lines
without indication = neither option A, B nor AB

specifies optical connector
FA = FC/APC (standard)

specifies wavelength
1310 = 1260 ... 1360 nm 1550 = 1500 ... 1600 nm (standard)

specifies data rate
40 = 10 → 40 Gbit/s
160 = 10 → 160 Gbit/s
640 = 40 → 640 Gbit/s

u2t photonics

Headquarters

u2t Photonics AG
Reuchlinstr. 10/11
10553 Berlin, Germany

Phone: +49(30)726113-500
Fax: +49(30)726113-800
E-mail contact@u2t.com

Regional Sales Partners

USA - East coast

Teracomm
800 Village Walk #296
Guilford, CT 06437
USA

Phone: +1/2032450237
Fax: +1/2032861535
Contact: Michael Carr
E-mail: sales@teracomm.com
http://www.teracomm.com

USA - West coast

Amasco
6830 Via Del Oro
Suite 106
San Jose, CA 95119
USA

Phone: +1/408 360 1300
Fax: +1/408 360 1309
Contact: Tom Fry
E-mail: tom@amasco.com
http://www.amasco.com

China

Luster Lightwave (Beijing) Corp.
F6, South Tower Newton Office
No. 25 Lan Dian Chang Nan Road
Haidian District
Beijing, 100089
China

Phone: +86/1088400202 Ext. 6101
Cell Phone: +86/13911774855
Fax: +86/1088400260
Contact: Vincent Wang
E-mail: vincentwang@lusterlighttech.com
http://www.lusterlighttech.com

Japan

I-Wave Corporation
Nakarin Auto Bldg. 5F
2-8-4 Shinkawa, Chuo-ku
Tokyo, 104-0033
Japan

Phone: +81/335371772
Fax: +81/335371773
Contact: Koichi Shimada
E-mail shimada@i-waveco.com
http://www.i-waveco.com

South Korea

CoreTech Corporation
2nd floor, Jaedang Bldg, 643-1
Bokjeong-Dong, Sujeong-Gu,
Seongnam-Si,
Gyeonggi-Do, 461-200
South Korea

Phone: +82/24465316
Fax: +82/24465326
Contact: Ukhyun Yun
E-mail: coretech@coretk.com
http://www.coretk.com

Singapore

Wintek International Pte Ltd
194 Pandan Loop #07-29
Pantech Industrial Complex
Singapore 128383

Phone: +65/67780498
Fax: +65/ 67780368
Contact: Justin Woon
E-mail: justin@wtk-intl.com
http://www.wtk-intl.com

Spain

BFI Optials, S.A.U.
Isabel Colbrand 6
28050 Madrid
Spain

Phone: +34/ 91 453 11 60
Fax: +34/ 91 662 68 37
Contact: Concepcion Marcos
E-mail: concepcion.marcos@bfioptilas.com
http://www.bfioptilas.com

France

BFI Optilas France
4, Allée du Cantal
Z.I. La Petite Montagne Sud
CE 1834, 91018 EVRY Cedex
France

Phone: +33/160798928
Fax: +33/160798903
Contact: Pierre Ball
E-mail: Pierre.Ball@bfioptilas.com
http://www.bfioptilas.fr